Type T Hydraulic Deadweight Tester Operation Manual

plus Service Instructions and Parts Lists

AMETEK®
SENSORS, TEST & CALIBRATION

Contents

Overview 1
- Introduction 1
  - Accuracy 1
  - Care and Handling 1
- Features and Parts Lists 2
  - Parts Included with Type T Hydraulic Deadweight Testers 2

Setup 3
- Single Column Deadweight Tester Configuration 3
- Dual Column Deadweight Tester Configuration 6

Operation 9
- Preparing to Generate Pressure 9
- Priming 10
- Adding Weight Masses 12
- Calibrating a Device Under Test 12

Maintenance and Replacement 15
- Piston and Cylinder Assemblies 15
- The Optional Isolating Membrane 18
- Cleaning 20

Specifications 21
  - Pressure Range 21
  - Recommended Test Fluids 21
  - Pressure Connections 21
  - Physical Specifications 21

Support 22
- Troubleshooting 22
  - Failure to Pump 22
  - Pump Does Not Hold Pressure 24
- Fitting Kits and Spare Parts 26
  - Service Kits 26
  - Hoses 26
  - Adapters 26
- Recommended Recertification Procedures 26
  - Frequency of Recertification 27
  - Certification Options for New and Used Deadweight Testers 27
- Appendices 28
  - Appendix A: International Deadweight Testers and Weight Sets 28
  - Appendix B: Assembly Drawings and Parts Lists 30
- Contact Us 40
- Returning product to AMETEK 40
- Warranty 40

Overview

INTRODUCTION

All models of Type T deadweight testers ship as complete kits, in ranges from 1 to 30 bar / 10 to 500 psi through 7 to 1000 bar / 100 to 15 000 psi. Models with the "T" prefix have suspended weights of hard, non-magnetic die cast alloy. Models with the "TQ" prefix have suspended weights of stainless steel that conform to material requirements of the National Institute of Standards and Technology, Class Q. All weights are calibrated either to international gravity 980.665 gals or to customer specified local gravities.

CAUTION: Keep weights clean and stored in their cases when not in use. Do not allow them to be scratched or dropped.

Note: For a complete list of available deadweight tester models and engineering units, refer to Appendix A: International Deadweight Testers and Weight Sets on pages 28 and 29.

Accuracy

Guaranteed accuracy of all hydraulic deadweight testers is +/- 0.100% of output pressure (optionally, 0.025% or 0.015% of output pressure).

Note: Limitations due to decreasing sensitivity, resulting primarily from friction, make it difficult to reproduce accuracy at the low end of the tester range. Generally, deadweight testers are recommended for use and are certified for accuracy only in the upper 90% of the designated operating range.

Calibration data is available at additional cost for standard accuracy (0.100%). This calibration data is included for testers calibrated to 0.025% or 0.015% and is always certified traceable to the United States, National Institute of Standard & Technology (NIST). Calibration data is determined by cross floating against a standard deadweight tester, which itself has been calibrated against a primary standard, certified by NIST.

Care and Handling

The Piston and Cylinder Assembly within the deadweight column is carefully machined to last for many years. The piston has been hardened, plated, ground, and honed. The cylinder is lapped and polished. The piston is captured within the cylinder. Clearances between the piston and cylinder are on the order of a few millionths of an inch. This necessitates extreme cleanliness and care.

CAUTION: Handle and install so as not to introduce scratches or nicks. Do not touch the working surfaces, including the outer diameter of the piston and the internal diameter of the cylinder with your hands or with dirty fabrics or fibers.

Fluid contamination may occur as fluid flows through the annulus space between the piston and cylinder. Foreign particles in the fluid system may enter the annulus space and can cause severe damage to the piston and cylinder. Binding and freezing may occur.

Refer to the Cleaning Procedure on page 20 for detailed instructions on the care and maintenance of the deadweight tester components.

CAUTION: Use only components provided by AMETEK for maintenance and assembly of this device.

FEATURES AND PARTS LISTS

The Type T Hydraulic Deadweight Tester may be ordered with either oil or a water/alcohol mixture as the pressure medium. There are three available seal packages for the system: Buna-N, Viton®, and EPT.

The hand pump features a dual pressure port manifold, fine adjust, vent valve, and dual volume control for rapid pressure increase at lower pressures and easier pumping at higher pressures.

Parts Included with Type T Hydraulic Deadweight Testers

Single and Dual Column Models

Part Number	Description
—	Hydraulic Hand Pump Mounted on Drip Pan
T-149	Manifold Assembly
1GT-99	Gauge Pointer Puller and Set Assembly
T-134	¼" Union Body
T-135	½" Union Body
T-185	7/16"–20 UNF Nipple
T-182	5/2" x 3/4" Open End Wrench
1GT-200	1" Open End Wrench
T-184	1 5/8" Open End Wrench
T-180	5/32" Hexagon Key
T-204	3/16" Hexagon Key
T-239	1/4" Hexagon Key
WG-28	Deadweight Column
01-90002	Deadweight Column Mounting Screws (3) (A)
WG-53	Weight Tube (B)
—	Piston and Cylinder Assembly
T-250	O-ring Rebuild Kit

Dual Column and ±0.015% Single Column Models Only

Part Number	Description
T-310	Base Plate
T-311-1	Connecting Tube
WG-318	Valve Assembly

Carrying Cases and Weight Sets

Part Number	Description
T-177	Type T Pump and Tools Carrying Case (C)
—	Weight Sets (D)
T-222	Small Weight Carrying Case (E)
WG-67	Large Weight Carrying Case

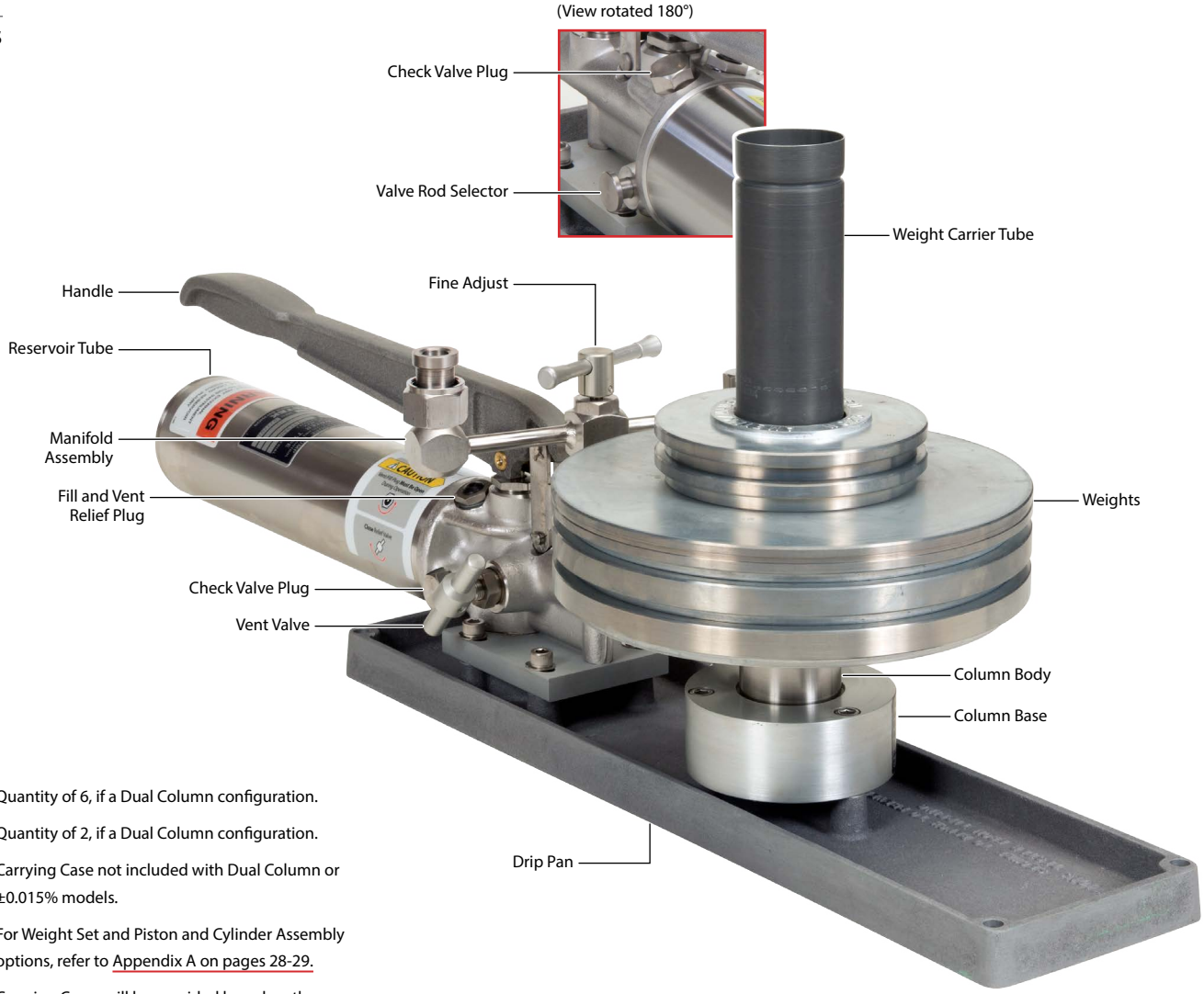

(A) Quantity of 6, if a Dual Column configuration.

(B) Quantity of 2, if a Dual Column configuration.

(C) Carrying Case not included with Dual Column or ±0.015% models.

(D) For Weight Set and Piston and Cylinder Assembly options, refer to Appendix A on pages 28-29.

(E) Carrying Cases will be provided based on the Weight Set(s) selected.

Setup

SINGLE COLUMN DEADWEIGHT TESTER CONFIGURATION

As shipped from the factory, the hand pump is assembled to the drip pan in position for use as a dedicated pressure source for a comparator or digital pressure calibration system. It must be reconfigured for deadweight testing.

▶ To Assemble the Handpump for Deadweight Testing

1. Remove the 4 screws connecting the pump to the drip pan.
2. Turn the pump 180 degrees.
3. Loosely mount the pump to the drip pan. Do not tighten the mounting screws.

Configuration for comparator testing

Configuration for deadweight testing

4. Remove the plug and o-ring from the front of the pump body.

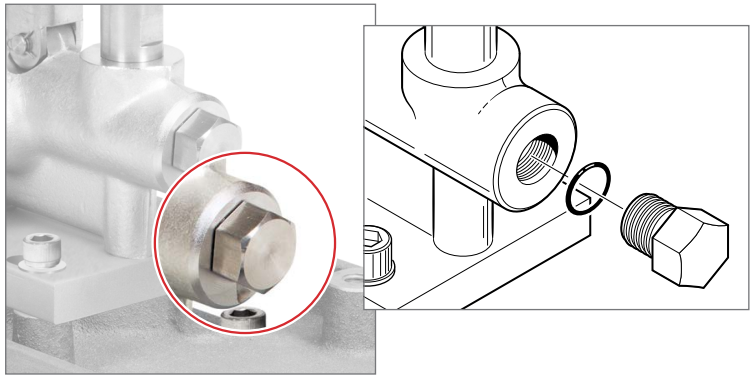

5 From one side of the pressure manifold, remove the union nipple, nut, and o-ring.

6 Replace the union nipple, nut, and o-ring with the plug and o-ring removed from the front of the pump body in step 4.

Remove the union nipple, nut, and o-ring…

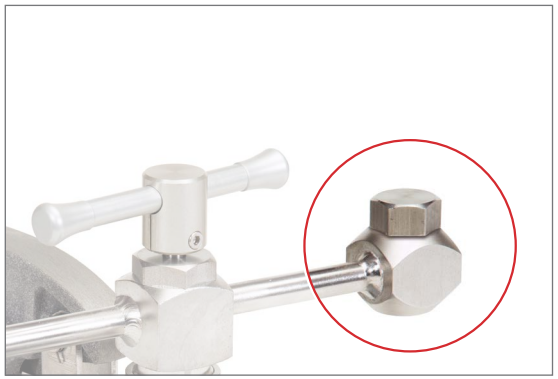

then replace with the plug and o-ring.

Note: Always lubricate the o-rings and all contacting metal parts before attempting assembly. Use the same fluid for a lubricant as will be used in the system.

7 Assemble the union nipple, nut, and o-ring removed in step 5 into the end of the pump body.

8 Locate the three threaded holes in the drip pan and loosely mount the column on the drip pan.

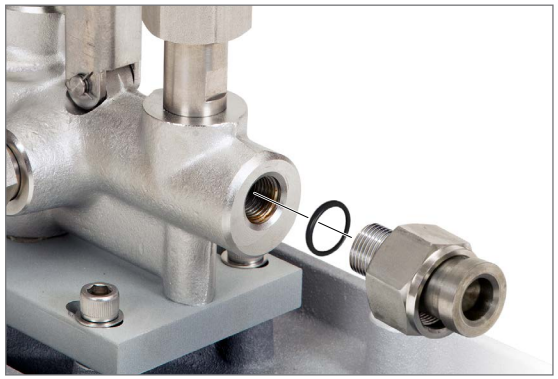

Assemble the union nipple, nut, and o-ring…

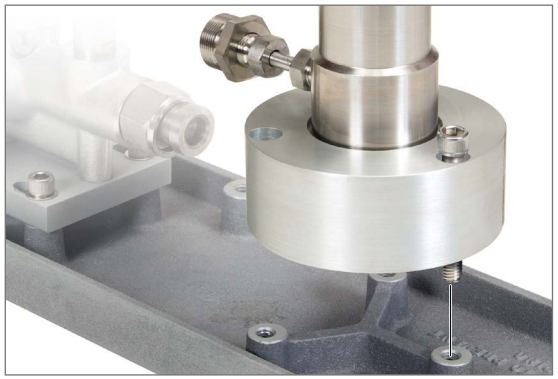

then loosely mount the column.

Note: The connection hardware required for this procedure is attached to the column at the factory. If it was removed upon delivery, reinstall it before proceeding.

! CAUTION: Ensure that the column and the pump are mounted loosely and can be moved into alignment before proceeding.

9 Align the union body (attached to the column) with the union nipple and nut on the front of the pump body.

10 Carefully finger-tighten the union nut to the union body.

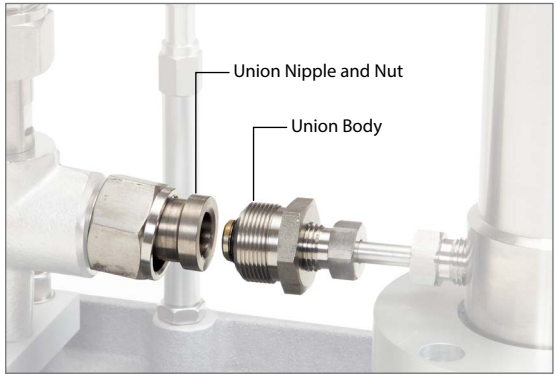

Align the connecting hardware…

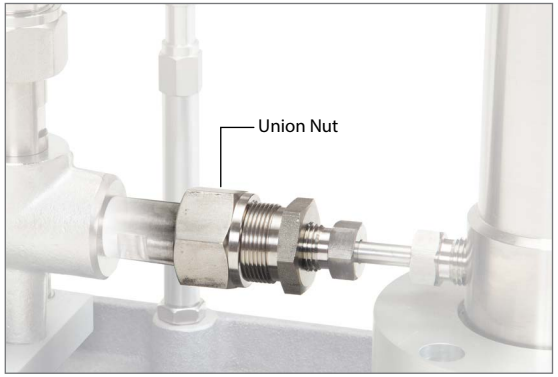

then finger-tighten the union nut.

11 Ensure again that the column-to-pump connecting hardware is in alignment, then apply a back-up wrench to the union nipple.

12 Using a second wrench, tighten the union nut onto the threads of the union body.

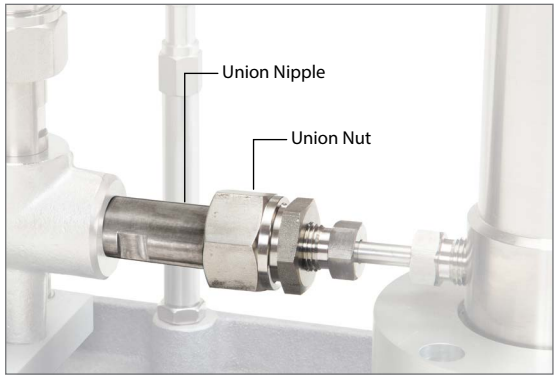

13 Tighten the pressure connections between the pump body and the column assembly.

14 Tighten the screws securing the column to the drip pan.

15 Tighten the mounting screws securing the pump to the drip pan.

! CAUTION: Deadweight testers should be bolted to a workbench or table to prevent tipping.

DUAL COLUMN DEADWEIGHT TESTER CONFIGURATION

A dual column configuration of the M&G dual range hydraulic deadweight tester is used to reduce the amount of time and labor necessary to operate the tester through its entire range. Each piston and cylinder is provided with a separate column so that changing the range of the tester is simplified, requiring only the closing of one valve and opening another.

The columns are rigidly mounted on a base plate, with a crossover valve and a leveling arrangement.

This device functions as a cross floating circuit to allow easy calibration of working pistons and cylinders against a master piston and cylinder of like area.

Accessory kits are available to permit conversion of existing type T testers to dual column testers.

T-312 is a complete set including columns, carriers and connecting parts. It is used to convert a pump into a dual column deadweight testing system. Piston and cylinder assemblies, and weights are purchased separately.

T-314 is used to convert a single column tester into a dual column tester. Only one column and carrier are supplied. The second piston and cylinder assembly is purchased separately.

▶ To Install the Dual Column Hydraulic Deadweight Tester

The procedure for installing the dual column configuration is the same for both the T-312 and T-314 assembly kits.

1 Attach the union nipple, nut, and o-ring to the front of the pump.

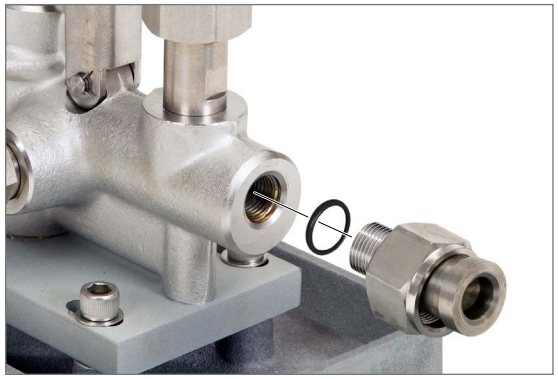

2 Align the union body with the union nipple and nut on the front of the pump body.

3 Carefully finger-tighten the union nut to the union body.

Align the union body with the union nipple…

then finger-tighten the union nut to the union body.

4 Apply a backup wrench to the union body, then use a second wrench to tighten the union nut onto the threads of the union body.

Connect the included U-shaped tubing to both the pump and crossover valve as follows:

5 Slip the gland nut onto the U-shaped tubing .

6 Thread the collar onto the U-shaped tubing until 1 or 2 threads are exposed between collar and cone of the tubing.

7 Insert the tubing with installed collar into the union body on the pump and thread the gland nut until finger tight.

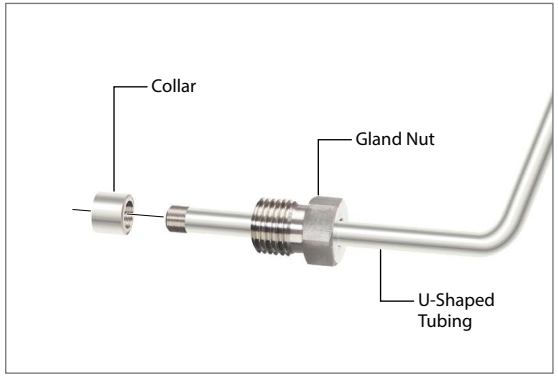

Thread the collar onto the U-shaped tubing…

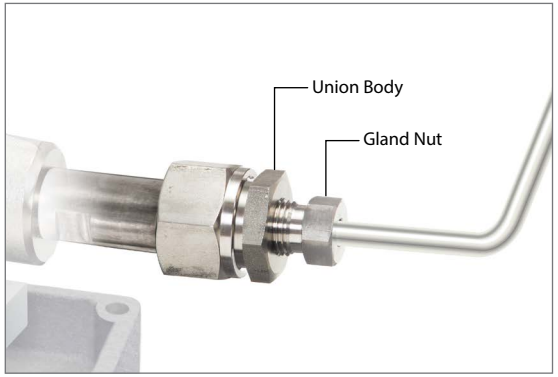

then insert the tubing into the union body.

8 Repeat steps 5 and 6 on the other end of the U-shaped tubing.

9 Insert the tubing with installed collar into the valve block on the dual column base plate and thread the gland nut until finger tight.

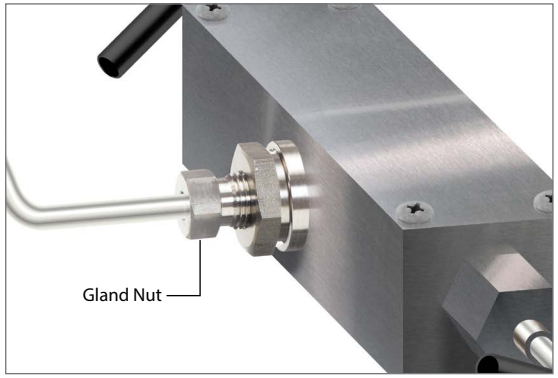

10 Tighten both gland nuts to 25 ft-lb torque (approximately 1/6 turn).

11 Install both columns to the dual column base plate using the provided mounting hardware.

12 Insert the tubing at the base of each column into the valve block, then complete the connection by tightening each gland nut.

13 Use the valve block to isolate one of the columns.

14 Install the piston and cylinder assemblies into the column. See To Install the Piston and Cylinder Assembly on page 16.

15 Use the valve block to isolate the second column.

16 Install the piston and cylinder assembly into the second column.

Operation

PREPARING TO GENERATE PRESSURE

1 Close the vent valve.

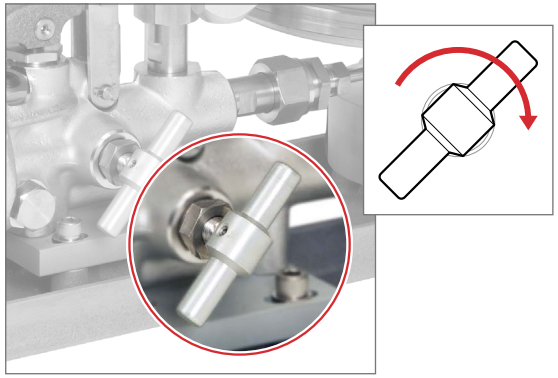

Note: It may be necessary to prime the pump, particularly for first time use, or if the pump has been inactive for an extended period of time. Refer to Priming on page 10 for instructions on priming the pump.

2 Pull the pump handle to the top of its stroke.

3 Pull out the valve rod selector to select the low pressure/high volume setting.

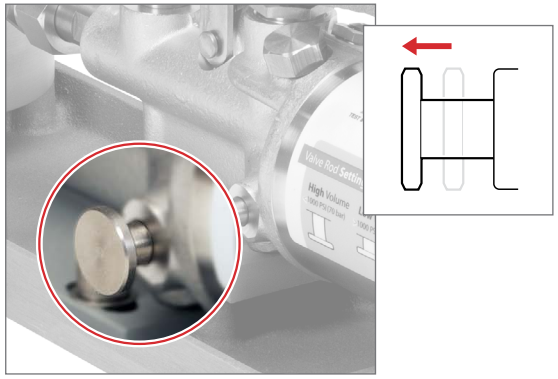

4 Gently operate the pump handle until test fluid fills the top of the pressure port on the pressure manifold.

Note: Lightly tap the manifold to make sure that any air bubbles sticking to the walls or in low flow areas are released to float to the surface.

5 Attach the device under test to the manifold.

6 Ensure all connections are tight and leak free.

Note: If no priming is necessary, proceed to Adding Weight Masses on page 12.

PRIMING

All pumps are thoroughly tested at the factory before shipment. One of the most common difficulties encountered is the loss of prime, which is evidenced by an inability to build pressure. This is caused by entrapped air in the system, which may collect in the high pressure/low volume check valve. When this occurs, the pump will not develop pressure with the valve rod selector positioned in, to the high pressure/low volume setting. The following priming procedure will correct the condition.

Note: For priming purposes, ***pump vigorously*** with full strokes of the hand lever.

Note: Verify the pump reservoir has sufficient fluid.

▶ To Prime the Pump

1 Connect a device under test with a pressure range of at least 300 bar / 5000 psi to the manifold.

! CAUTION: Significant pressure can develop during the priming process. Therefore, any device mounted to the manifold should have a range of at least 300 bar / 5000 psi. Alternately, all devices may be removed, and the manifold plugged.

2 Pull the pump handle to the top of its stroke.

3 Open the vent valve.

4 Pull out the valve rod selector to select low pressure/high volume.

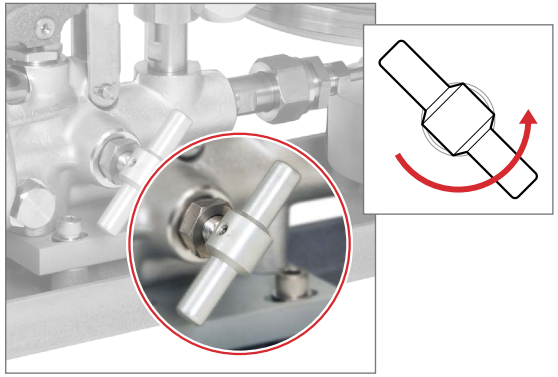

Open the vent valve…

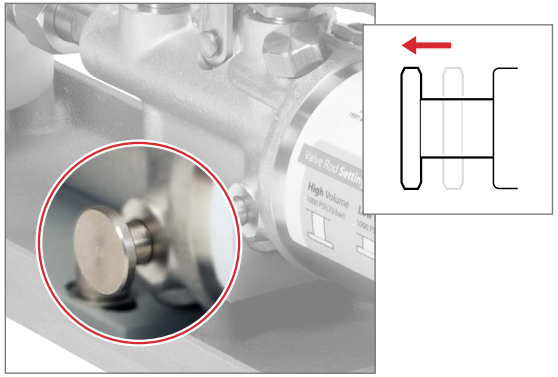

then select low pressure/high volume.

5 Pump ten full strokes, then close the vent valve.

6 Continue pumping to verify the low pressure/high volume setting operates properly and that the pump holds pressure.

7 Open the vent valve.

8 Pump ten more strokes.

9 Remove the high pressure/low volume check valve plug.

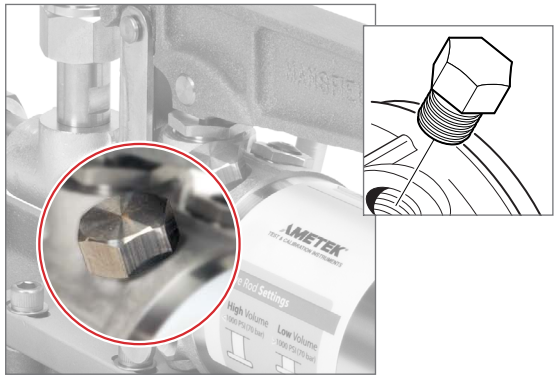

10 Slowly pump two and one-half strokes, positioning the pump handle at approximately 45 degrees—halfway through its stroke.

11 Allow system fluid to flow out of the high pressure check valve, flushing entrapped air.

12 Examine the port for air bubbles which may adhere to the threads or parts.

Note: If air bubbles are present, repeat steps 10 through 12 until no more air bubbles appear.

13 Replace the high pressure/low volume check valve plug and tighten partially.

14 Use slight pressure on the hand lever to push system fluid past the high pressure/low volume check valve plug to ensure complete purging of the valve port.

15 Tighten the high pressure/low volume check valve plug.

16 Operate the pump handle until pumping becomes difficult.

17 Raise the pump handle.

18 Push in the valve rod selector to the high pressure/low volume position.

19 Resume pumping to verify the pump is operating properly.

Note: If the high pressure/low volume setting does not operate properly, there is more air trapped in the high pressure/low volume check valve. The priming procedure must be repeated.

ADDING WEIGHT MASSES

Weight masses are suspended from the weight carrier tube, which is suspended from the piston assembly. Weight placed on the weight carrier tube should be equal to between 90% and 100% of the range of the device under test. Note that masses need to be added to achieve test points consistent with the sequencing used on the certification data sheet.

Note: A piston assembly, in combination with a weight carrier tube, will produce its own pressure (based on its force and mass). That pressure needs to be factored in when deciding how much weight to add to the carrier tube. Refer to the Pressure Produced on Piston tables on pages 28 and 29 for pressure produced by the different piston assemblies.

For example, to obtain 145 psi, using a 1/10 square inch area piston, the following weights would be added onto the weight carrier tube (in the test sequence order used on the data sheet):

- (1) grooved 9" diameter weight: WG-26 . . . 95 psi
- (2) 6" diameter weights: WG-25 . . . . . 40 psi
- (1) 3 1/2" diameter weight: WG-23 . . . . . 5 psi

Subtotal . . . . . 140 psi

- 1/10 square inch area piston . . . . . 5 psi
  and weight carrier tube

Total . . . . . 145 psi

CALIBRATING A DEVICE UNDER TEST

1. Check that the vent fill plug is fully open by turning it counter-clockwise.
2. Open the vent valve.

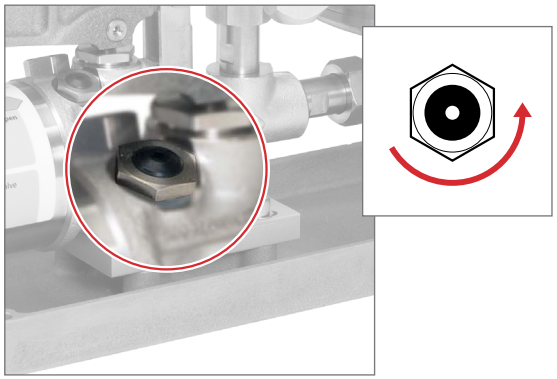

Open the vent plug…

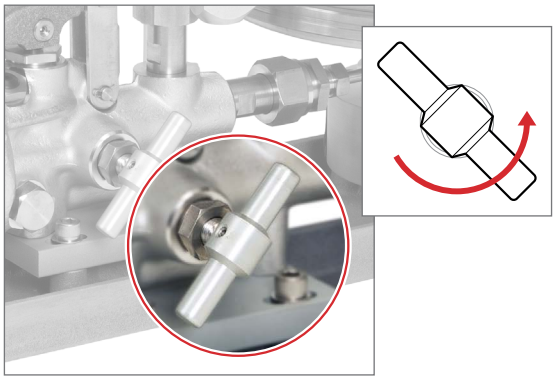

then open the vent valve.

3 Set the valve rod selector to control your desired fluid output volume.

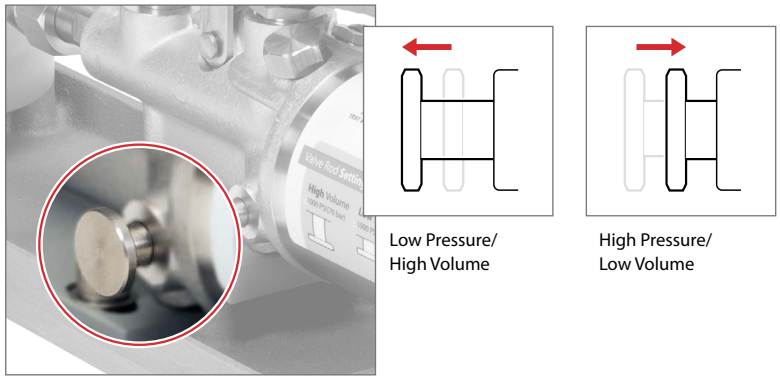

! CAUTION: Only move the valve rod selector while the pump handle is stationary, in the up position.

Note: With the valve rod in the "out" position, fluid flow will be at maximum and the maximum achievable pressure will be 1000 psi. To exceed 1000 psi, push the valve rod in.

4 Zero the device under test.

5 Close the vent valve.

6 Place weight on the weight carrier tube to equal the pressure of the first test point of the device under test.

7 Operate the pump handle to build up pressure until the weights float freely.

8 Rotate the weights 10 to 30 RPM.

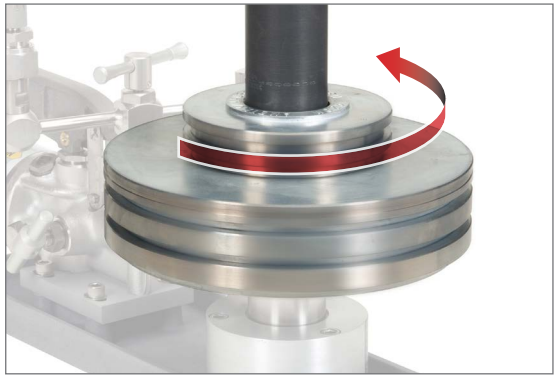

9 Wait an appropriate time for the pressure to stabilize, and then record the reading.

Note: Tapping the case of the device under test (or some other form of light agitation) may be necessary in certain circumstances.

10 Repeat steps 7 through 9, adding weight to equal the pressures of the remaining test points for the device under test, and recording each reading.

If hysteresis performance is desired, proceed to step 11.

If hysteresis performance is not desired, proceed to step 16.

11 Remove weight from the weight carrier tube to equal the pressure of the first descending test point for the device under test.

12 Slowly open the vent valve to release pressure as necessary.

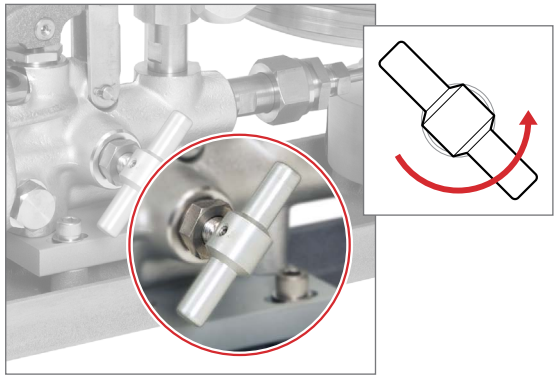

13 Check that the weights are floating freely and rotating at 10 to 30 RPM.

14 Wait an appropriate time for the pressure to stabilize, and then record the reading.

15 Repeat steps 11 through 14, removing weight to equal the pressures of the remaining test points for the device under test, and recording each reading.

16 With the weights stationary, slowly open the vent valve to release pressure from the system.

! CAUTION: Ensure that the system is completely vented, and that the valve is completely open before proceeding to the next step.

17 When the weights and weight carrier tube have come to a complete rest at the bottom of their travel, remove the remaining weights from the weight carrier tube.

Maintenance and Replacement

PISTON AND CYLINDER ASSEMBLIES

! CAUTION: Do not allow the parts exposed in the following steps to come into contact with dirt, debris, or fine particles of any kind.

▶ To Remove the Piston and Cylinder Assembly

1. Remove any weights placed on the weight carrier tube.
2. Remove the weight carrier tube to expose the weight carrier.
3. Remove the eight (8) socket head cap screws holding the cylinder cap to the column body.

Note: To loosen the socket head cap screws, insert the hex driver through the holes in the weight carrier.

Remove the weight carrier tube…

then the socket head cap screws.

4. Carefully lift off the weight carrier and cylinder cap from the column body.

5 Remove the piston and cylinder assembly. If necessary, you may use a blunt edge screw driver under the groove on top of the cylinder to gently pry upwards.

6 Carefully remove the piston from the cylinder.

Remove the piston and cylinder assembly…

then remove the piston.

! CAUTION: Do not allow the parts exposed in the following steps to come into contact with dirt, debris, or fine particles of any kind. If necessary, clean the piston and cylinder before installing. See **To Clean the Piston and Cylinder Assembly on page 20.**

▶ To Install the Piston and Cylinder Assembly

1 Coat the piston with a light film of test fluid, and then carefully slide the piston into the cylinder bore.

Carefully slide the coated piston into the cylinder bore.

2 Check that the back-up ring and o-ring are properly mounted on the cylinder.

3 Wet the outer surface of the o-ring.

Note: If an optional, isolating membrane has been installed on the piston and cylinder assembly, coat the piston with a light film of MGAAA instrument oil. See **The Optional Isolating Membrane** and **To Install the Isolating Membrane on page 18.**

4 Carefully install the piston and cylinder assembly into the column body.

5 Replace the cylinder cap.

6 Install and tighten four (4) of the eight (8) socket head cap screws. This will seat the cylinder into its correct position.

7 Remove the four (4) socket head cap screws installed in step 6, and then remove the cylinder cap.

8 Gently operate the pump handle until fluid fills to the top of the cylinder.

9 Replace the cylinder cap.

10 Install the eight (8) socket head cap screws and tighten alternately to 30 inch-lb.

11 Rotate the weight carrier (at the top of the cylinder cap) until you feel the piston driver drop onto the piston cap drive pin.

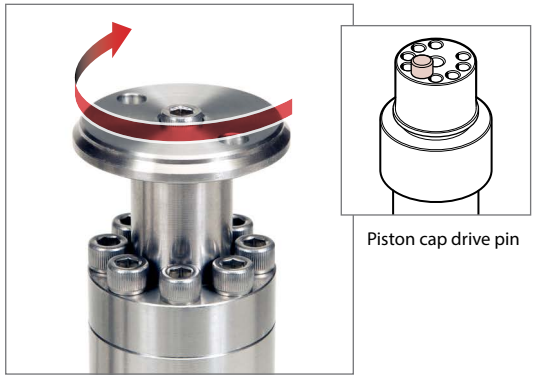

Piston cap drive pin

12 Replace the weight carrier tube.

THE OPTIONAL ISOLATING MEMBRANE

An optional isolating membrane is available for installation on all deadweight tester models. The isolating membrane:

- Isolates harmful dirt particles, originating in the system being calibrated and/or the pump, from the piston cylinder.
- Allows the use of MGAAA instrument oil in contact with the piston-cylinder assembly which will reduce the rate of fluid leakage through that assembly. This reduces the frequency of the pumping required to maintain the piston in the referenced calibration plane.

! CAUTION: Use only MGAAA oil provided by M&G for the isolating membrane. The AAA designation means that it is triple filtered for suspended solids.

! CAUTION: Do not allow the parts exposed in the following steps to come into contact with dirt, debris, or fine particles of any kind.

▶ To Install the Isolating Membrane

Once the piston and cylinder assembly has been removed, the optional isolating membrane may be installed.

1. Remove the piston and cylinder assembly.

   See To Remove the Piston and Cylinder Assembly on page 15.

2. Remove the piston from the cylinder.
3. Remove the o-ring from the cylinder and set it aside.
4. Install the isolating membrane on the cylinder.

Remove the cylinder o-ring…

then install the isolating membrane.

5. Carefully insert the cylinder, with the membrane attached, into the column body.

Note: MGAAA instrument oil and a plastic fill bottle are necessary to complete this procedure. Both the oil and bottle may be ordered from AMETEK.

6 Push the capillary tube of the instrument oil bottle through the center of the cylinder, into the isolating membrane.

7 Squeeze the oil bottle to fill the membrane up to the bottom of the cylinder bore.

8 Using the hand pump, carefully pump fluid into the column to compress the membrane and bring its fluid level to the top of the cylinder.

9 Coat the piston with a light film of MGAAA oil.

10 Using care not to force, damage, or bend the piston, carefully work the piston down into the cylinder bore while simultaneously releasing pump pressure with the Pressure Vent Valve so that the piston will enter the cylinder bore without any trapped air.

11 Replace the cylinder cap.

12 Install the eight (8) socket head cap screws and tighten alternately to 30 inch-lb.

Note: To operate with the required degree of sensitivity, there must be a controlled clearance between the cylinder bore and piston. Therefore, there will be some leakage of fluid through this annulus area. The loss of fluid will depend on the length of the test period, the range of pressure determinations, and the test conditions. The amount of fluid in the isolating membrane should be checked periodically.

CLEANING

Each M&G piston and cylinder assembly is tested within very close tolerances during manufacture for pressure retention (leak rate), for sensitivity, and for accuracy of calibration. Each assembly is then cleaned, identified by a serial number and stored until shipped.

CAUTION: A piston and cylinder assembly is a very closely fitted assembly. Clearances between the piston and cylinder are on the order of 5 to 20 millionths of an inch. Such clearances require utmost cleanliness for satisfactory operation.

To Clean the Piston and Cylinder Assembly

CAUTION: Extremely small particles can cause trouble in this closely fitted assembly. Take extreme care to ensure cleanliness.

1. Carefully wipe off any visible dirt or foreign matter from the protruding part of the piston and slowly withdraw the piston from the cylinder.

CAUTION: Do not use force, but be sure all dirt is removed so the piston will slip out easily.

2. The cylinder bore should be wiped with a small, soft-handled wiper such as a cotton swab to remove all evidence of dirt.
3. Wipe the piston dry and clean with a lint free wiper, such as a lint free cloth.
4. Rinse the piston and cylinder in a residual free solvent.
5. Wipe the cylinder bore and piston again to remove any dirt.
6. Pick up the piston by the piston cap.
7. Dip it in clean test fluid.
8. Carefully insert the piston in the cylinder.

CAUTION: Repeat this cleaning procedure if you notice any roughness or grit in the annulus area while re-inserting the piston.

9. The deadweight column in which the piston is to be mounted should be drained and flushed with a solvent such as ethyl alcohol, then cleaned, dried, and refilled using clean test fluid.

   See To Install the Piston and Cylinder Assembly on page 16 to install the piston and cylinder assembly into a column.

Specifications

Pressure Range

0 to 1000 bar / 0 to 15 000 psi

Recommended Test Fluids

The following fluids are recommended for use with this pump:

Standard . . . . . Distilled water and Isopropyl alcohol mix

Optional. . . . . MGAAA oil

Other fluids compatible with stainless steel, Monel, Buna N and Teflon may be used. Optional Viton and EPT o-rings are available.

Volume . . . . . 30 oz (887 mL)

Low Volume / High Pressure Setting . . . 2.8 to 3.2 cc per stroke

High Volume / Low Pressure Setting . . . 3.0 to 4.0 cc per stroke

Pressure Connections

▶ Device Under Test Port

Standard . . . . . 1/4" NPT and 1/2" NPT

Optional. . . . . 7/16 UNF-1/4" BSP, and 1/2" BSP.

Physical Specifications

▶ Pump

Dimensions. . . . . 20.625 in / 524 mm (L) x 5 in / 127 mm (W) x 9.78 in / 249 mm (H)*

Weight . . . . . 18.6 lbs / 8.4 kg

* Height includes manifold.

▶ Tester and Case

Weight . . . . . 50.0 lbs / 22.7 kg

▶ Weight Sets

Weight . . . . . 55.0 lbs to 210.0 lbs / 25.0 kg to 95.3 kg

Support

TROUBLESHOOTING

Failure to Pump

▶ **Problem:** The pump fails to develop pressure when the hand lever is operated.

▶ **Solution:** Verify that the vent valve is closed and that there is sufficient fluid in the reservoir. If necessary, add fluid through the fill plug and follow the Pump Priming Procedure.

If the failure continues, one or both of the check valves may be leaking. Use the following procedure to replace both the high pressure and low pressure o-rings.

▶ **To Replace the Check Valve O-rings**

1. Raise the pump handle to the top of its stroke.
2. Position the valve rod selector for the o-ring you wish to replace.
   - (a) Pull out the valve rod selector to select the low pressure/high volume setting.
   - (b) Push in the valve rod selector to select the high pressure/low volume setting.
3. Remove the plug and o-ring from the port for the check valve o-ring you wish to replace.

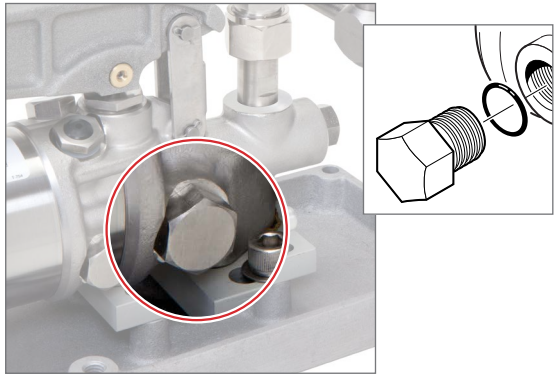

Low pressure/high volume check valve plug and o-ring.

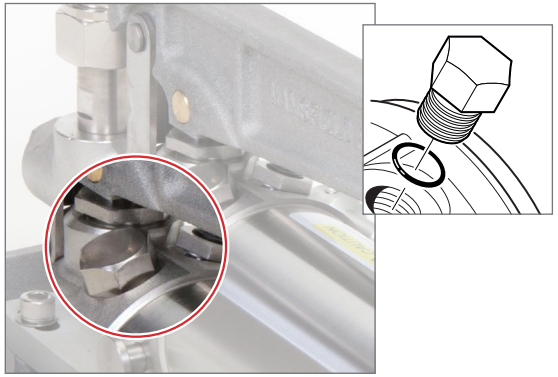

High pressure/low volume check valve plug and o-ring.

4 Remove the check valve spacer, spring, valve poppet, and check valve o-ring.

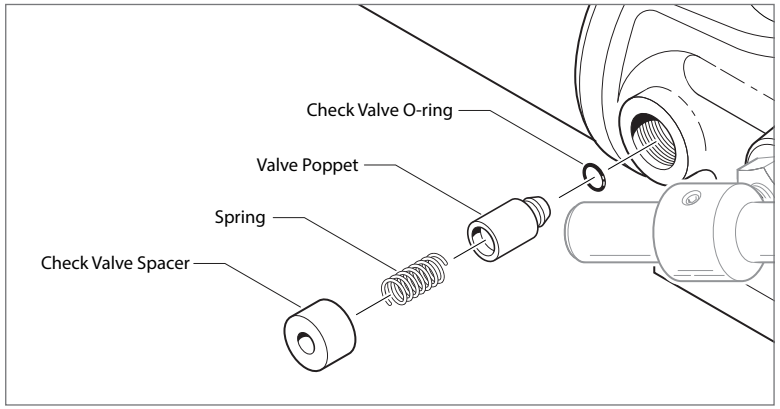

5 Inspect the check valve o-ring, and replace it if necessary. Then re-install the o-ring, valve poppet, spring, and check valve spacer.

6 Slowly pump two and one-half strokes, positioning the pump lever at approximately 45 degrees, halfway through its stroke.

7 Allow system fluid to flow out of the low pressure check valve, flushing entrapped air.

8 Examine the port for air bubbles which may adhere to the threads or parts.

Note: If air bubbles are present, repeat steps 2 through 5 until no more air bubbles appear.

9 Install the check valve plug and o-ring and tighten partially.

10 **If installing the low pressure/high volume check valve plug...** Tighten the check valve plug.

The procedure for the low-pressure/high volume side is now complete.

11 **If installing the high pressure/low volume check valve plug...** Use slight pressure on the hand lever to push system fluid past the high pressure/low volume check valve plug to ensure complete purging of the valve port.

12 Tighten the high pressure/low volume check valve plug.

13 Operate the pump handle until pumping becomes difficult.

14 Raise the pump handle to the top of its stoke.

15 Push in the valve rod selector to the high pressure/low volume position.

16 Resume pumping to verify the pump is operating properly.

Pump Does Not Hold Pressure

▶ **Problem:** The pump operates but the pressure declines beyond normal adiabatic effects.

▶ **Solution:** One of two o-rings may be leaking. As the pressure drops, observe the hand lever. If the hand lever rises, the discharge check valve is leaking and its o-ring should be replaced.

▶ To Replace the Discharge Check Valve O-ring

1 Remove the plug and o-Ring from the front of the pump body.

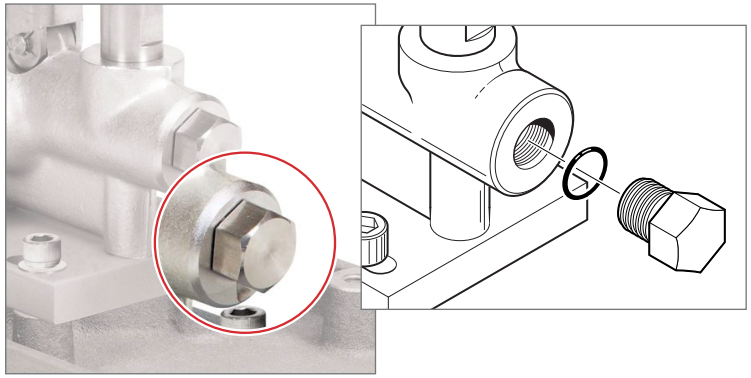

2 Use a screwdriver to loosen and remove the retaining plug. then remove the guide rod, spring, valve poppet and check valve o-ring.

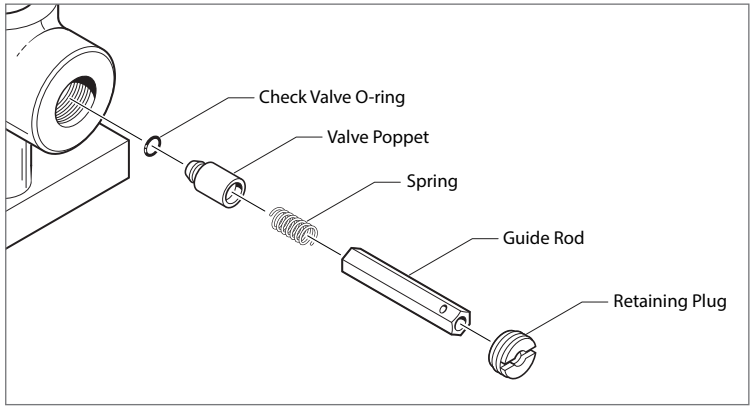

3 Inspect the check valve o-ring, and replace it if necessary. Then re-install the o-ring, valve poppet, spring, and guide rod.

4 Thread in the retaining plug until it is tightly seated. Then back off 3 ½ turns to provide sufficient travel for the valve poppet.

5 Install the check valve plug and o-ring.

▶ To Replace the Vent Valve O-ring

1. Apply a wrench to the nut at the base of the pressure relief valve.
2. Remove the vent valve and its o-ring.

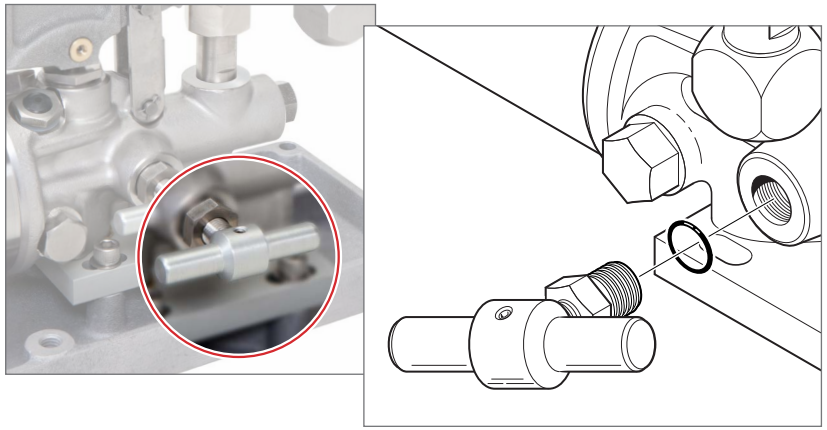

3. Remove the relief valve seat and its o-ring.

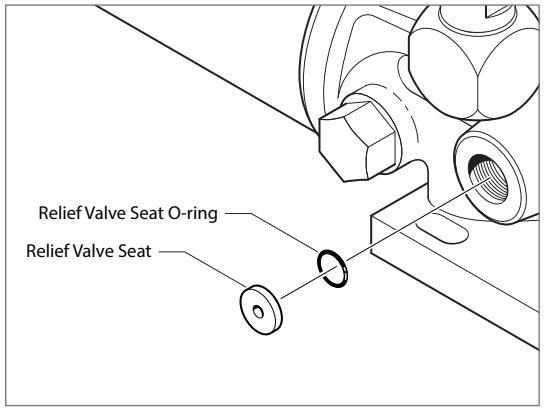

4. Inspect the relief valve seat o-ring, and replace it if necessary. Then re-install the o-ring, valve poppet, spring, and guide rod.
5. Install the vent valve and o-ring.

FITTING KITS AND SPARE PARTS

Service Kits

▶ **T-1**

T-250 . . . . . **Buna N rebuild kit**

T-559 . . . . . **Viton rebuild kit**

T-326 . . . . . **EPT rebuild kit**

Hoses

▶ **T-1**

KH-18 . . . . . **Hose.** 0.46 m 1/4" NPT male x 1/4" NPT male 700 bar / 10 000 psi.

Adapters

▶ **T-1**

T-134 . . . . . **Union Body.** 15/16-20 UNEF male x 1/4" NPT female.

T-135 . . . . . **Union Body.** 15/16-20 UNEF male x 1/2" NPT female.

T-186 . . . . . **Union Body.** 15/16-20 UNEF male x 7/16" NPT female.

T-331 . . . . . **Union Body.** 15/16-20 UNEF male x 3/8" NPT female.

T-863 . . . . . **Union Body.** 15/16-20 UNEF male x 1/8" NPT female.

T-786 . . . . . **Adapter.** 1/4" NPT male x 1/4" BSP female.

T-787 . . . . . **Adapter.** 1/4" NPT male x 1/2" BSP female.

T-915 . . . . . **Quick Connector.** 1/4" NPT male.

T-916 . . . . . **Quick Connector Plug.** 1/4" NPT male.

RECOMMENDED RECERTIFICATION PROCEDURES

All deadweight pressure testers produced by AMETEK, M&G are tested and certified in the M&G laboratory for accuracy of pressure produced, with results traceable to the National Institute of Standards and Technology.

In addition, if ±0.025% or ±0.015% accuracy is required, data is furnished showing nominal and observed pressures within the upper 90% of the range of each piston and cylinder, with results directly traceable to the National Institute of Standards and Technology.

Note: This data is optional on the ±0.010% units.

This accuracy can degrade with wear resulting from continued use and/or incidental damage. AMETEK, M&G recommends all instruments be periodically retested for accuracy. Testers returned to AMETEK, M&G will be "Tested and re-certified with data furnished traceable to NIST."

Frequency of Recertification

The recommended frequency of output pressure recertification is a direct function of the frequency and type of use to which the tester is applied.

As a general rule, AMETEK, M&G hydraulic testers should be tested and recertified every 12 months. Testers used frequently, or with dirty fluids, should be tested and certified at more frequent intervals. Master units, used infrequently with clean fluid, may need to be tested and certified less frequently.

For recertification, return the following materials to AMETEK, M&G:

- Piston-cylinder assemblies:
  - WG-89 (0.1 in2)
  - WG-90 (0.05 in2)
  - WG-91 (0.02 in2)
  - WG-92 (0.01 in2)
- Carrier Tube Assembly (WG-56)
- Weight Carrier Tube (WG-53)
- All weights bearing the same serial number as the tester

Note: It is not necessary to send in the pump if it is operating properly. Pumps may be refurbished at a nominal charge.

Note: In order to reduce process time and your overall cost, please do not send in any customized fittings, hoses, tools, or small miscellaneous parts.

All parts returned to M&G must be securely packaged to preclude damage during shipping. Pistons and cylinders should be placed within the protective container (T-539) or other secure package. Weights should be packaged individually to prevent damaging each other in transit.

Certification Options for New and Used Deadweight Testers

Before ordering a new deadweight tester or sending an old deadweight tester back to M&G, specify one of the following certification options and any additional requirements on your purchase order. Contact your distributor if you need any assistance.

Option	Description	Details
A	Standard certification of accuracy traceable to NIST standards.	Item is repaired and calibrated. No data is provided.

Options with Additional Cost

B	"With Data"— Option A Plus Data.	Item is repaired and calibrated. Data is provided.
C	"As Received/As Left"— Data plus Option A.	Item is cleaned and tested with no adjustments or repairs. Then the item is adjusted or repaired and recalibrated if necessary.

APPENDICES

Appendix A: International Deadweight Testers and Weight Sets

▶ (psi) Deadweight Testers

Model			Range–psi	Increments	Piston Area	Weight Set
	T-5	TQ-5	10–500	5 psi	0.1 sq. in.	#1
	T-10	TQ-10	10–1000	5 psi	0.1 sq. in.	#2
	T-15	TQ-15	10–1500	5 psi	0.1 sq. in.	#3
	T-20	TQ-20	20–2000	10 psi	0.05 sq. in.	#2
	T-30	TQ-30	20–3000	10 psi	0.05 sq. in.	#3
	T-55	TQ-55	50–5000	25 psi	0.02 sq. in.	#2
	T-110	TQ-110	100–10000	50 psi	0.01 sq. in.	#2
	T-155	TQ-155	100–15000	50 psi	0.01 sq. in.	#3
T-50 Dual Range	TQ-50 Dual Range	DM-TQ-50 Dual Range	10–500 100–5000	5 psi 50 psi	0.1 sq. in. 0.01 sq. in.	#1
T-100 Dual Range	TQ-100 Dual Range	DM-TQ-100 Dual Range	10–1000 100–10000	5 psi 50 psig	0.1 sq. in. 0.01 sq. in.	#2
T-150 Dual Range	TQ-150 Dual Range	DM-TQ-150 Dual Range	10–1500 100–15000	5 psi 50 psi	0.1 sq. in. 0.01 sq. in.	#3

▶ (bar) Deadweight Testers

Model		Range–bar	Increments	Piston Area	Weight Set
	TSQ-40B	1–40	0.5 bar	0.1 sq. in.	#1NQ
	TSQ-70B	1–70	0.5 bar	0.1 sq. in.	#2NQ
	TSQ-100B	1–100	0.5 bar	0.1 sq. in.	#3NQ
	TSQ-200B	2–200	1 bar	0.05 sq. in.	#3NQ
	TSQ-400B	10–400	5 bar	0.01 sq. in.	#1NQ
	TSQ-700B	10–700	5 bar	0.01 sq. in.	#2NQ
	TSQ-1000B	10–1000	5 bar	0.01 sq. in.	#3NQ
TQD-400B Dual Range	DM-TQ-400B Dual Range	1–40 10–400	0.5 bar 5 bar	0.1 sq. in. 0.01 sq. in.	#1NQ
TQD-700B Dual Range	DM-TQ-700B Dual Range	1–70 10–700	0.5 bar 5 bar	0.1 sq. in. 0.01 sq. in.	#2NQ
TQD-1000B Dual Range	DM-TQ-1000B Dual Range	1–100 10–1000	0.5 bar 5 bar	0.1 sq. in. 0.01 sq. in.	#3NQ

▶ (lb) Weight Sets—for psi Deadweight Testers

Weight Set Numbers	Weights Furnished per Nominal Weight				Number of Cases
	0.5 lb. (WG-23)	2.0 lb. (WG-25)	9.5 lb. (WG-26)	10 lb. (WG-27)	
#1	4	4	1	3	1
#2	4	4	1	8	2
#3	4	4	1	12	3

▶ (g) Weight Sets—for bar Deadweight Testers

Weight Set Numbers	Weights Furnished per Nominal Weight					Number of Cases
	Converter WG-301Q	329 g WG-305Q	1316 g WG-304Q	5921 g WG-303Q	6579 g WG-302Q	
#1NQ	1	4	4	1	2	1
#2NQ	1	4	4	1	5	2
#3NQ	1	4	4	1	8	3

▶ (psi) Pressure Produced on Piston

Part No.	Mass	WG-89 (1/10)	WG-90 (1/20)	WG-91 (1/50)	WG-92 (1/100)
WG-23	.5 lb	5	10	25	50
WG-25	2.0 lb	20	40	100	200
WG-26	9.5 lb	95	190	475	950
WG-27	10.0 lb	100	200	500	1000

▶ (bar) Pressure Produced on Piston

Part No.	Mass	WG-89	WG-90	WG-91	WG-92
WG-305Q	328.94 g	0.5	1.0	2.5	5.0
WG-304Q	1315.76 g	2.0	4.0	10.0	20.0
WG-303Q	5920.919 g	9.0	18.0	45.0	90.0
WG-302Q	6578.799 g	10.0	20.0	50.0	100.0

Key: **T-** Single piston or dual piston/single column with alloy weights. **TQ- or TSQ-** Single piston/single column with stainless steel weights. **TQD-** Dual piston/single column with stainless steel weights. **DM-T-** Dual piston/dual mount unit with alloy weights. **DM-TQ-** Dual piston/dual mount unit with stainless steel weights.

Appendix A: International Deadweight Testers and Weight Sets (continued)

▶ (kPa) Deadweight Testers

	Model	Range–kPa	Increments	Piston Area	Weight Set
	TSQ-4000N	100–4000	50 kPa	0.1 sq. in.	#1NQ
	TSQ-7000N	100–7000	50 kPa	0.1 sq. in.	#2NQ
	TSQ-10000N	100–10000	50 kPa	0.1 sq. in.	#3NQ
	TSQ-40000N	1000–40000	500 kPa	0.01 sq. in.	#1NQ
	TSQ-70000N	1000–70000	500 kPa	0.01 sq. in.	#2NQ
	TSQ-100000N	1000–100000	500 kPa	0.01 sq. in.	#3NQ
TQD-40000N Dual Range	DM-TQ-40000N Dual Range	100–4000 1000–40000	50 kPa 500 kPa	0.1 sq. in. 0.01 sq. in.	#1NQ
TQD-70000N Dual Range	DM-TQ-70000N Dual Range	100–7000 1000–70000	50 kPa 500 kPa	0.1 sq. in. 0.01 sq. in.	#2NQ
TQD-100000N Dual Range	DM-TQ-100000N Dual Range	100–10000 1000–100000	50 kPa 500 kPa	0.1 sq. in. 0.01 sq. in.	#3NQ

▶ (kg/cm²) Deadweight Testers

	Model	Range–kg/cm²	Increments	Piston Area	Weight Set
	TSQ-40M	1–40	0.5 kg/cm²	0.1 sq. in.	#1MQ
	TSQ-70M	1–70	0.5 kg/cm²	0.1 sq. in.	#2MQ
	TSQ-100M	1–100	0.5 kg/cm²	0.1 sq. in.	#3MQ
	TSQ-200M	2–200	1 kg/cm²	0.05 sq. in.	#3MQ
	TSQ-400M	10–400	5 kg/cm²	0.01 sq. in.	#1MQ
	TSQ-700M	10–700	5 kg/cm²	0.01 sq. in.	#2MQ
	TSQ-1000M	10–1000	5 kg/cm²	0.01 sq. in.	#3MQ
TQD-400M Dual Range	DM-TQ-400M Dual Range	1–40 10–400	50 kPa 500 kPa	0.1 sq. in. 0.01 sq. in.	#1MQ
TQD-700M Dual Range	DM-TQ-700M Dual Range	1–70 10–700	50 kPa 500 kPa	0.1 sq. in. 0.01 sq. in.	#2MQ
TQD-1000M Dual Range	DM-TQ-1000M Dual Range	1–100 10–1000	50 kPa 500 kPa	0.1 sq. in. 0.01 sq. in.	#3MQ

▶ (g) Weight Sets—for kPa Deadweight Testers

	Weights Furnished per Nominal Weight					
Weight Set Numbers	Converter WG-301Q	329 g WG-305Q	1316 g WG-304Q	5921 g WG-303Q	6579 g WG-302Q	Number of Cases
#1NQ	1	4	4	1	2	1
#2NQ	1	4	4	1	5	2
#3NQ	1	4	4	1	8	3

▶ (g) Weight Sets—for kg/cm² Deadweight Testers

	Weights Furnished per Nominal Weight					
Weight Set Numbers	Converter WG-201Q	329 g WG-205Q	1316 g WG-204Q	5921 g WG-203Q	6579 g WG-202Q	Number of Cases
#1MQ	1	4	4	1	2	1
#2MQ	1	4	4	1	5	2
#3MQ	1	4	4	1	8	3

▶ (kPa) Pressure Produced on Piston

Part No.	Mass	WG-89	WG-90	WG-91	WG-92
WG-305Q	328.94 gm	50	100	250	500
WG-304Q	1315.76 gm	200	400	1000	2000
WG-303Q	5920.919 gm	900	1800	4500	9000
WG-302Q	6578.799 gm	1000	2000	5000	10000

▶ (kg/cm²) Pressure Produced on Piston

Part No.	Mass	WG-89	WG-90	WG-91	WG-92
WG-205Q	328.94 g	0.5	1.0	2.5	5.0
WG-204Q	1315.76 g	2.0	4.0	10.0	20.0
WG-203Q	5920.919 g	9.0	18.0	45.0	90.0
WG-202Q	6578.799 g	10.0	20.0	50.0	100.0

Notes: The "Q" in a model number indicates stainless steel weights.
All 0.015% units are supplied with stainless steel weights.
Dual piston 0.015% units are supplied with two complete weight sets: one for each piston/cylinder.

Appendix B: Assembly Drawings and Parts Lists

▶ Figure 1.1 • **Hydraulic Hand Pump Type T Assembly**

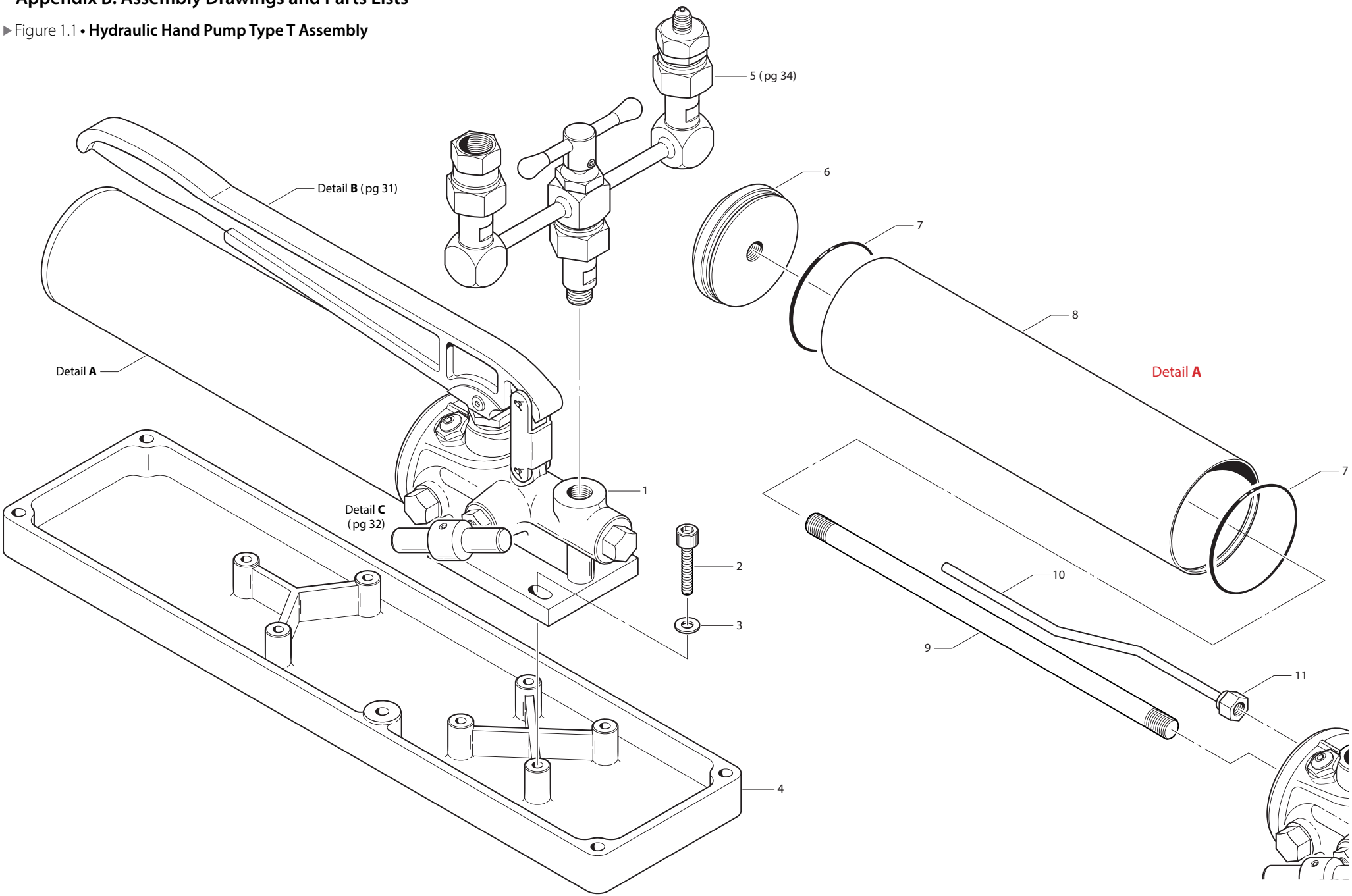

▶ Figure 1.2 • **Hydraulic Hand Pump Type T Assembly**

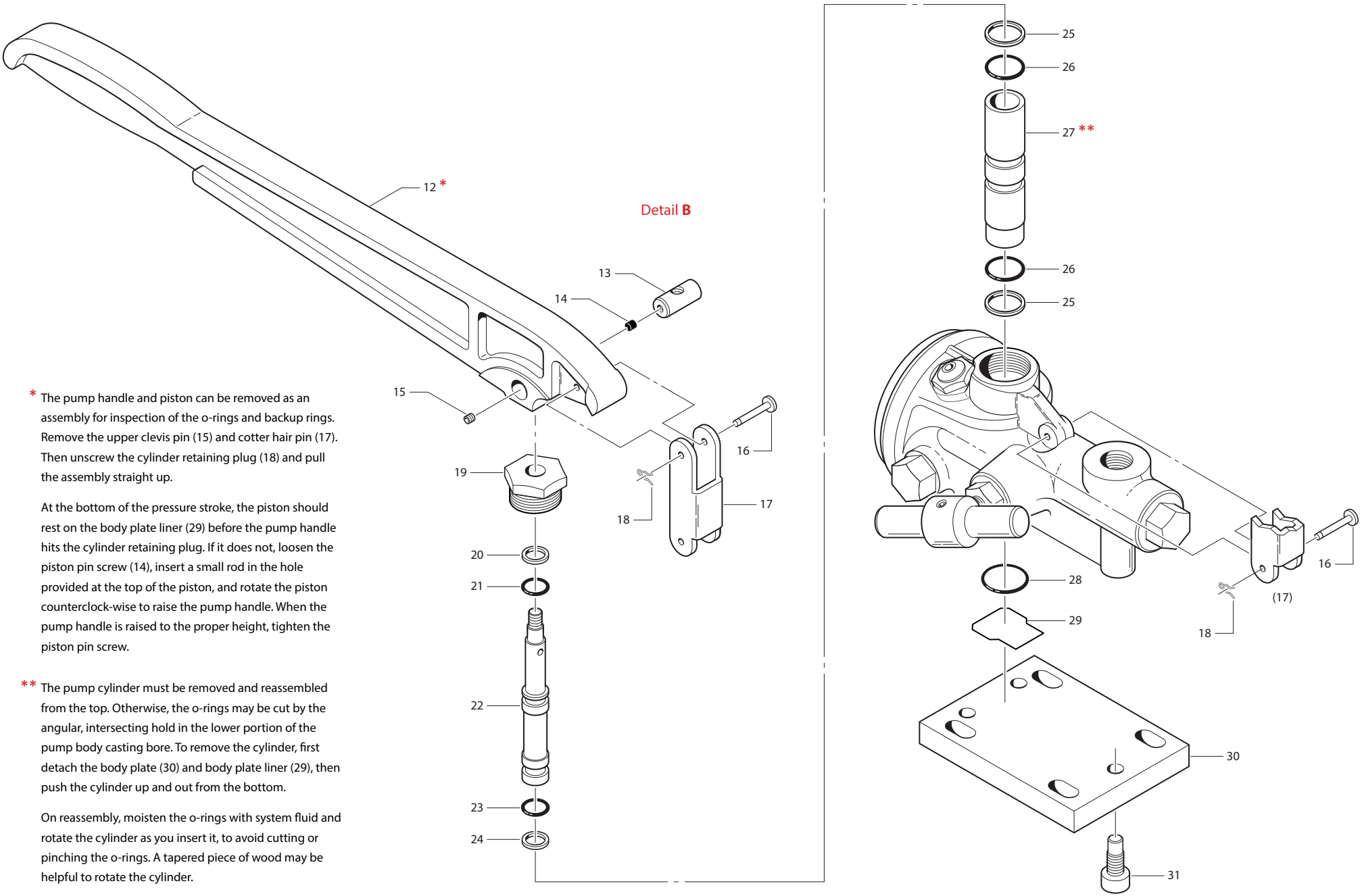

* The pump handle and piston can be removed as an assembly for inspection of the o-rings and backup rings. Remove the upper clevis pin (15) and cotter hair pin (17). Then unscrew the cylinder retaining plug (18) and pull the assembly straight up.

At the bottom of the pressure stroke, the piston should rest on the body plate liner (29) before the pump handle hits the cylinder retaining plug. If it does not, loosen the piston pin screw (14), insert a small rod in the hole provided at the top of the piston, and rotate the piston counterclock-wise to raise the pump handle. When the pump handle is raised to the proper height, tighten the piston pin screw.

** The pump cylinder must be removed and reassembled from the top. Otherwise, the o-rings may be cut by the angular, intersecting hold in the lower portion of the pump body casting bore. To remove the cylinder, first detach the body plate (30) and body plate liner (29), then push the cylinder up and out from the bottom.

On reassembly, moisten the o-rings with system fluid and rotate the cylinder as you insert it, to avoid cutting or pinching the o-rings. A tapered piece of wood may be helpful to rotate the cylinder.

▶ Figure 1.3 • **Hydraulic Hand Pump Type T Assembly**

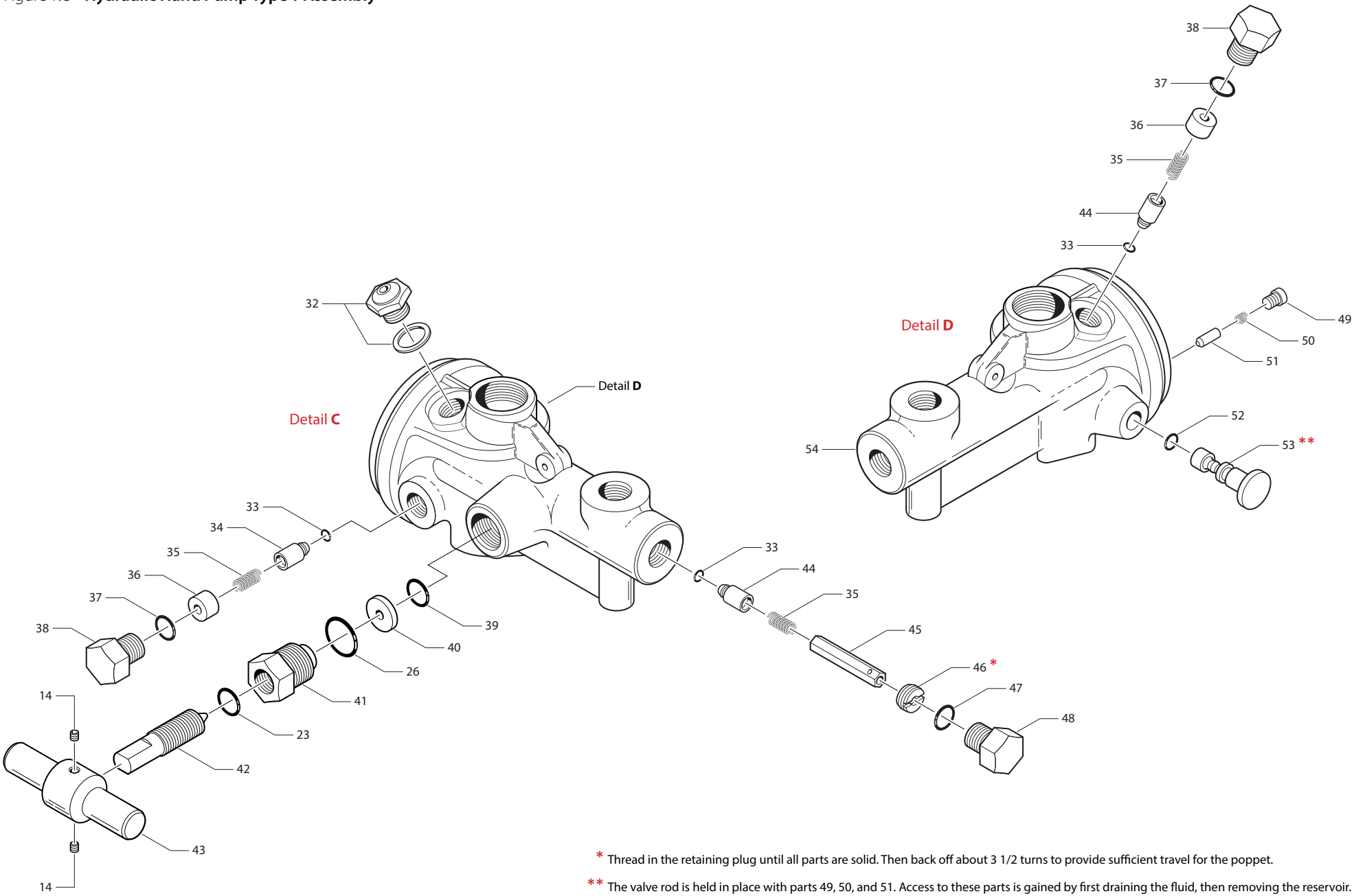

* Thread in the retaining plug until all parts are solid. Then back off about 3 1/2 turns to provide sufficient travel for the poppet.

** The valve rod is held in place with parts 49, 50, and 51. Access to these parts is gained by first draining the fluid, then removing the reservoir.

▶ Figure 1.4 • **Hydraulic Hand Pump Type T Assembly Parts List**

Item Number	Part Number	Description	Units Per Assembly
1	–	Type T Pump Assy	1
2	01-90007	Screw, Drip Pan Attaching	4
3	T-167	Washer, Drip Pan Attaching	4
4	T-118	Drip Pan	1
5	T-149	Manifold Assembly (see page 32)	1
6	T-328	Cap, Reservoir	1
7	10-90010	O-ring, Reservoir Tube (T-156)	2
8	T-131	Tube, Reservoir	1
9	T-130	Stud, Reservoir	1
10	T-140	Tube, Inlet	1
11	12-90152	Fitting, Inlet Tube	1
12	T-165	Handle, Pump	1
13	T-145	Pin, Piston	1
14	T-161	Shoe, Piston Pin	1
15	T-160	Screw, Piston Pin	3
16	T-142	Pin, Clevis	2
17	T-143	Clevis	1
18	T-144	Hair Pin, Cotter	2
19	T-108	Plug, Cylinder Retaining	1
20	10-90019	Back-up Ring, Piston (T-158)	1
21	10-90006	O-ring (T-154)	1
22	T-106	Piston	1
23	10-90005	O-ring (T-151)	2
24	10-90018	Back-up Ring, Piston (T-159)	1
25	10-90020	Back-up Ring, Cylinder (T-112)	2
26	10-90013	O-ring (T-153)	3
27	T-236	Cylinder, Pump	1
28	10-90012	O-ring, Cylinder (T-164)	1
29	T-595	Liner, Body Plate	1
30	T-408	Plate, Body	1
31	01-90004	Screw, Body Attaching	3
32	IGT-302	Plug and Spacer, Fill and Vent Relief Assy	1

Item Number	Part Number	Description	Units Per Assembly
33	10-90001	O-ring (T-152)	3
34	T-194	Poppet, Valve	1
35	CV-1-5	Spring, Check Valve	3
36	T-127	Spacer, Check Valve	2
37	10-90027	O-ring (T-154)	2
38	T-117	Plug, Pump Body	2
39	10-90002	O-ring (T-175)	1
40	T-111	Seat, Relief Valve	1
41	T-109	Body, Relief Valve	1
42	T-110	Stem, Relief Valve	1
43	T-773	Handle, Relief Valve	1
44	T-147	Poppet, High Pressure Valve	2
45	T-107	Guide Rod	1
46	T-141	Plug, Retaining	1
47	10-90009	O-ring (T-136)	1
48	T-103	Plug	1
49	T-166	Screw	1
50	T-116	Spring, Valve Rod	1
51	T-133	Detent Pin, Valve Rod	1
52	10-90004	O-ring	1
53	T-115	Valve Rod	1
54	T-120	Body, Pump	1

▶ Figure 2 • **Manifold Assembly and Parts List**

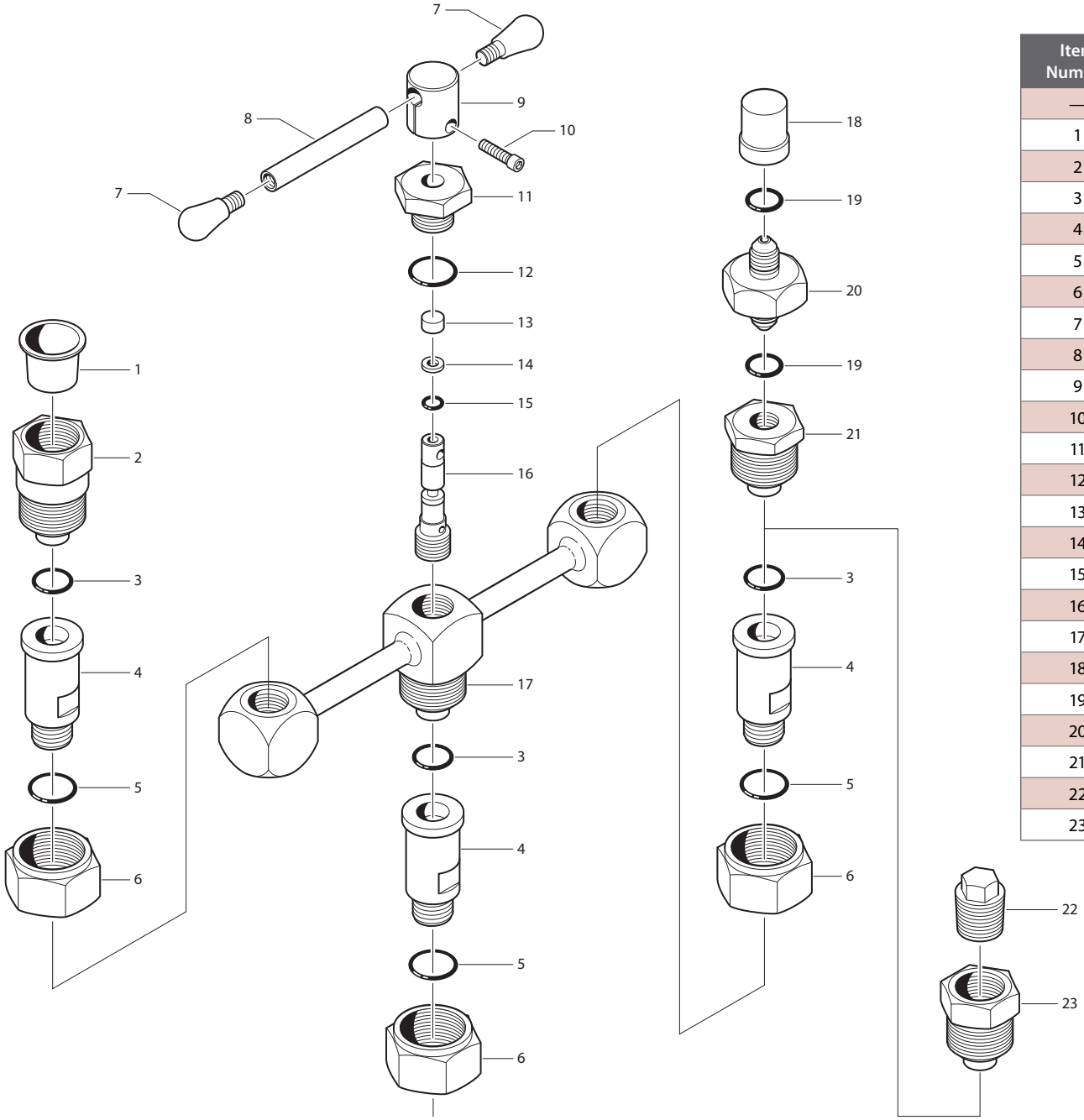

Item Number	Part Number	Description	Units Per Assembly
—	T-149	Type T Manifold Assembly	—
1	—	Thread Protector, ½ NPT	1
2	T-135	Body, Union — ½ NPT	1
3	10-90027	O-ring (T-154)	3
4	T-126	Nipple, Union	3
5	10-90009	O-ring, Union Nipple (T-136)	3
6	T-146	Nut, Union	3
7	T-102	Knob, Handle	2
8	T-119	Handle, Fine Adjust	1
9	T-132	Handle Hub, Fine Adjust	1
10	T-174	Screw, Hub	1
11	T-113	Bushing, Fine Adjust Piston	1
12	10-90011	O-ring, Fine Adjust (T-157)	1
13	T-190	Plug, Friction	1
14	10-90017	Back-up Ring, Fine Adjust (T-179)	1
15	10-90001	O-ring, Fine Adjust (T-152)	1
16	T-114	Piston, Fine Adjust	1
17	T-125	Manifold, Offset Pipe	1
18	99-90001	Cap	1
19	10-90005	O-ring, Nipple (T-151)	2
20	T-185	Nipple, 7/16 – 20 UNF	1
21	T-186	Body, Union — 7/16 – 20 UNF	1
22	T-162	Plug, Pipe	1
23	T-134	Body, Union — ¼ NPT	1

▶ Figure 3.1 • **Deadweight Pressure Tester Assembly**

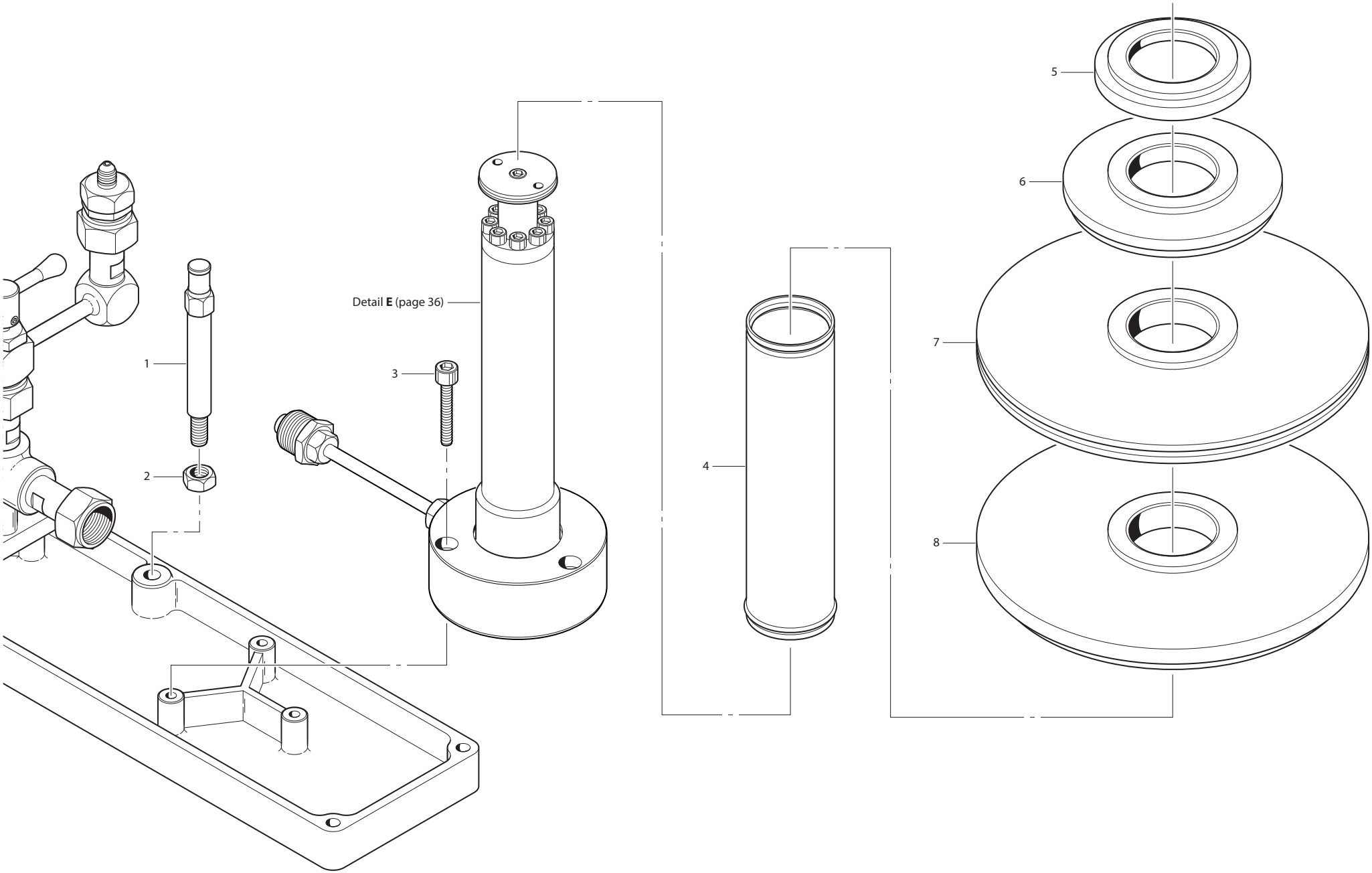

▶ Figure 3.2 • **Deadweight Pressure Tester Assembly**

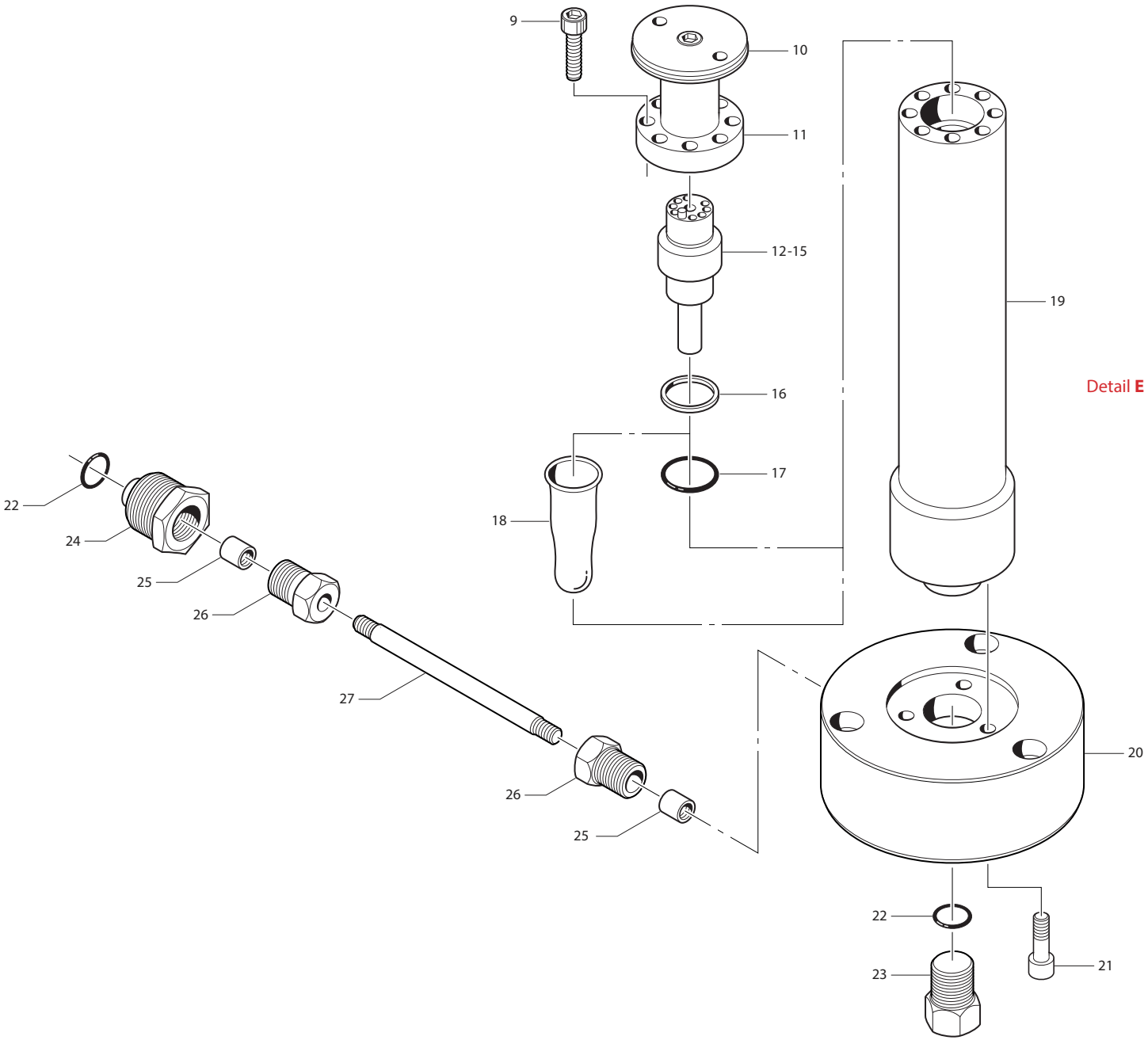

▶ Figure 3.3 • **Deadweight Pressure Tester Assembly Parts List**

Item Number	Part Number	Description	Units Per Assembly
1	T-137	Indicator, Weight Position	1
2	T-178	Nut, Indicator	1
3	01-90016	Screw, Column Base Attaching	3
4	WG-53	Tube, Weight Carrier	1
5	WG-23	Weight — 0.5 lb. Kirksite	*
5	WG-23Q	Weight — 0.5 lb. Brass	*
6	WG-25	Weight — 2 lbs. Kirksite	*
6	WG-25Q	Weight — 2 lbs. Brass	*
7	WG-26	Weight — 9.5 lbs. Kirksite	*
7	WG-26Q	Weight — 9.5 lbs. Brass	*
8	WG-27	Weight — 10 lbs. Kirksite	*
8	WG-27Q	Weight — 10 lbs. Brass	*
9	01-90038	Screw, Cylinder Clamping	8
10	WG-56	Tube Carrier Assembly	1
11	WG-52	Cap, Cylinder	1
12	WG-89	Piston and Cylinder Assembly — 1/10 Area	*
13	WG-90	Piston and Cylinder Assembly — 1/20 Area	*
14	WG-91	Piston and Cylinder Assembly — 1/50 Area	*
15	WG-92	Piston and Cylinder Assembly — 1/100 Area	*
16	10-90039	Back-up Ring, Cylinder (WG-108)	*
17	10-90015	O-ring, Cylinder (WG-111)	*
18	WG-109	Membrane, Elastomer (Optional)	1
19	WG-28	Body, Column	1
20	T-244	Base, Column	1
21	01-90002	Screw, Column Body Attaching	3
22	10-90027	O-ring (T-154)	2
23	T-117	Plug, Column	1
24	T-245	Body, Union	1
25	WG-140	Collar, Nipple	2

* For Weight Set and Piston and Cylinder Assembly options refer to Appendix A on pages 28-29.

Item Number	Part Number	Description	Units Per Assembly
26	WG-139	Male Gland, Nipple	2
27	T-246	Nipple, Pump Connecting	1
—	T-177	Case, Carrying	1
—	T-222	Case, Weight Carrying	**
—	WG-67	Case, Weight Carrying	**

** Carrying Cases will be provided based on the Weight Set(s) selected.

▶ Figure 4 • **Service Tools and Parts List**

Item Number	Part Number	Description	Units Per Assembly
1	1GT-99	Puller and Set Assembly, Gauge Pointer	1
2	T-180	Wrench, 5/32" Hexagon Key, Short Series	1
3	T-204	Wrench, 3/16" Hexagon Key, Tee Handle	1
4	T-239	Wrench, 1/4" Hexagon Key, Tee Handle	1
5	1GT-200	Wrench, Open End, Thin 1"	1
6	T-184	Wrench, Open End, Thin 1 5/8"	1
7	T-182	Wrench, Open End, Thin 5/8" x 3/4"	1

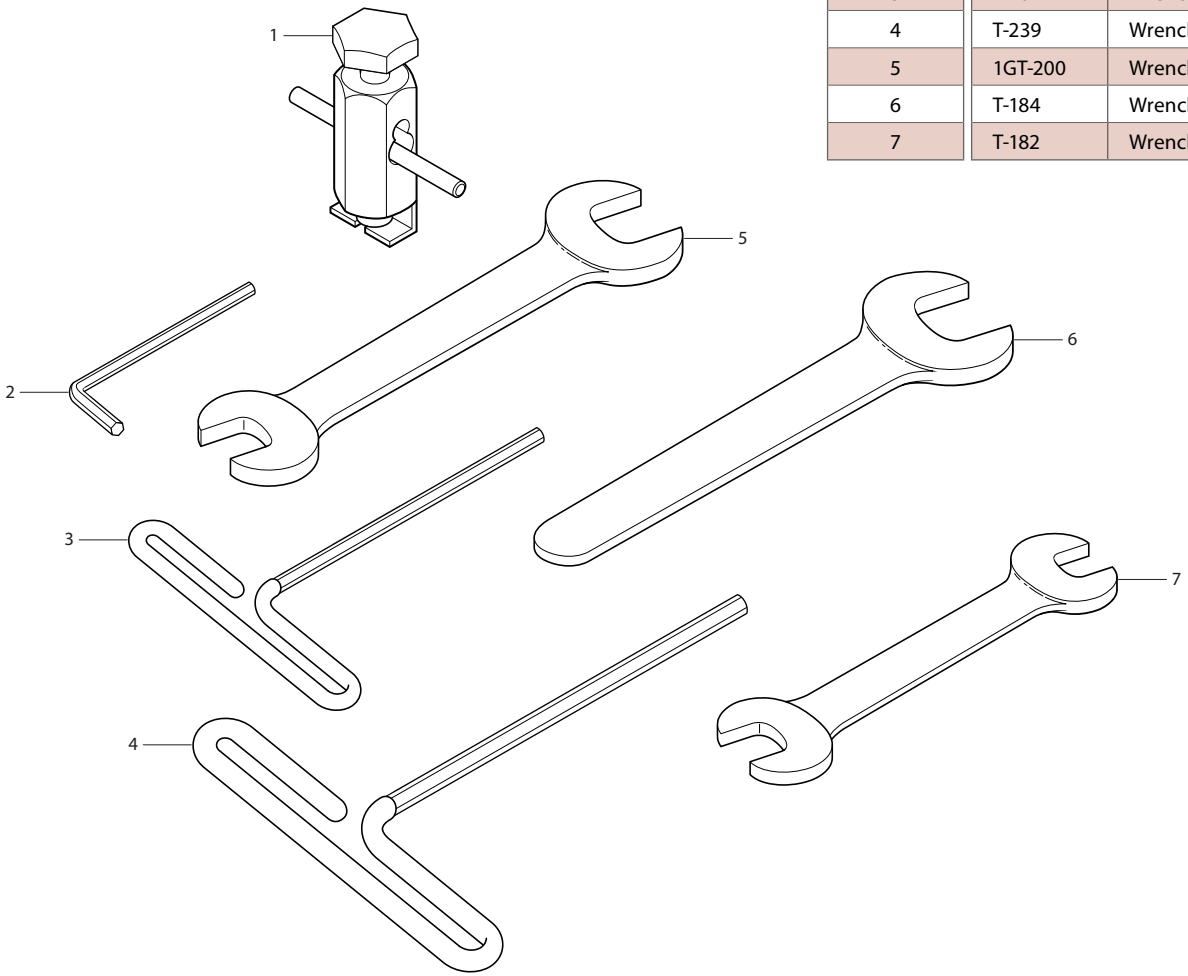

▶ Figure 5 • **Gauge and Fitting Assembly and Parts List**

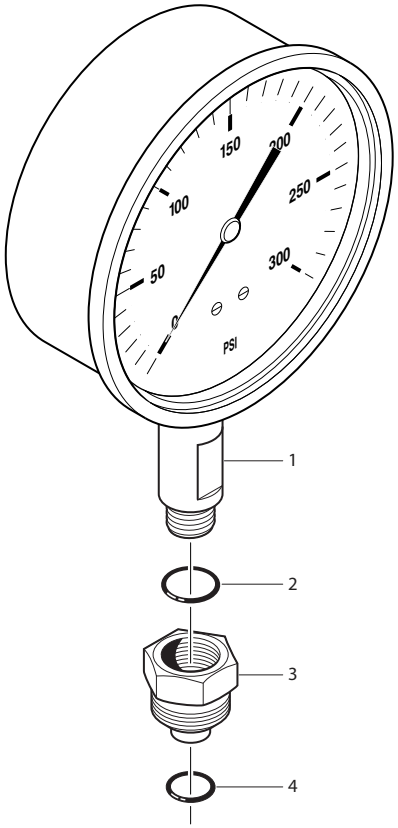

Item Number	Part Number	Description	Units Per Assembly
1	—	Gauge and Fitting Assembly	4
	T-274	Test Gauge, 4 ½", 0-30 psi	*
	T-275	Test Gauge, 4 ½", 0-160 psi	*
	T-276	Test Gauge, 4 ½", 0-600 psi	*
	T-277	Test Gauge, 4 ½", 0-3000 psi	*
	T-278	Test Gauge, 4 ½", 0-5000 psi	*
	T-279	Test Gauge, 4 ½", 0-10 000 psi	*
2	10-90009	O-ring, Body Union (T-136)	**
3	T-173	Body, Union	**
4	10-90027	O-ring, Body Union	**

* Gauges will be provided based on the Deadweight Testing Kit selected.

** One each per Gauge Assembly. Four each per Tester Assembly

CONTACT US

United Kingdom
Tel +44 (0)1243 833 302
jofra@ametek.co.uk

France
Tel +33 (0)1 30 68 89 40
general.lloyd-instruments@ametek.fr

Germany
Tel +49 (0)2159 9136 510
info.mct-de@ametek.de

Denmark
Tel +45 4816 8000
jofra@ametek.com

USA
Florida - Mansfield & Green
Tel +1 (800) 527 9999
cal.info@ametek.com

California - Crystal Engineering
Tel +1 (800) 444 1850
sales@crystalengineering.net

India
Tel +91 22 2836 4750
jofra@ametek.com

Singapore
Tel +65 6484 2388
jofra@ametek.com

China
Shanghai
Tel +86 21 5868 5111

Beijing
Tel +86 10 8526 2111

Guangzhou
Tel +86 20 8363 4768
jofra.sales@ametek.com.cn

RETURNING PRODUCT TO AMETEK

Please contact your sales representative to complete a Return Material Authorization (RMA) form and/or receive an RMA number.
Return/shipping instructions will be provided with the RMA number.

WARRANTY

This instrument is warranted against defects in workmanship, material and design for one (1) year from date of delivery to the extent that AMETEK will, at its sole option, repair or replace the instrument or any part thereof which is defective, provided, however, that this warranty shall not apply to instruments subjected to tampering or, abuse, or exposed to highly corrosive conditions.

THIS WARRANTY IS IN LIEU OF ALL OTHER WARRANTIES WHETHER EXPRESS OR IMPLIED AND AMETEK HEREBY DISCLAIMS ALL OTHER WARRANTIES, INCLUDING, WITHOUT LIMITATION, ANY WARRANTY OF FITNESS FOR A PARTICULAR PURPOSE OR MERCHANTABILITY. AMETEK SHALL NOT BE LIABLE FOR ANY INCIDENTAL OR CONSEQUENTIAL DAMAGES, INCLUDING, BUT NOT LIMITED TO, ANY ANTICIPATED OR LOST PROFITS.

This warranty is voidable if the purchaser fails to follow any and all instructions, warnings or cautions in the instrument's Instruction Manual.

If a manufacturing defect is found, AMETEK will replace or repair the instrument or replace any defective part thereof without charge; however, AMETEK's obligation hereunder does not include the cost of transportation, which must be borne by the customer. AMETEK assumes no responsibility for damage in transit, and any claims for such damage should be presented to the carrier by the purchaser.

SENSORS, TEST & CALIBRATION

© 2025 AMETEK Incorporated

8600 Somerset Drive, Largo, Florida 33773

Form № 68-23 rev 16 2512